PULSE Freestanding Tub

Model # PT-1043-BN, PT-1043-CH, PT-1043-150-BN, PT-1043-150-CH

Specification Sheet

297 Anna St. | Watsonville, CA 95076
831.724.7300
www.PulseShowerSpas.com

PT-1043

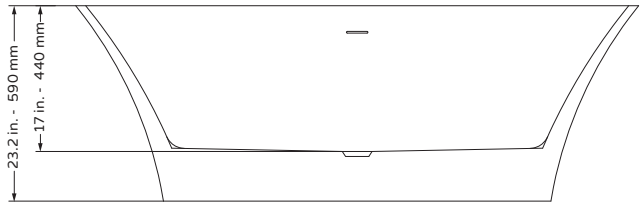

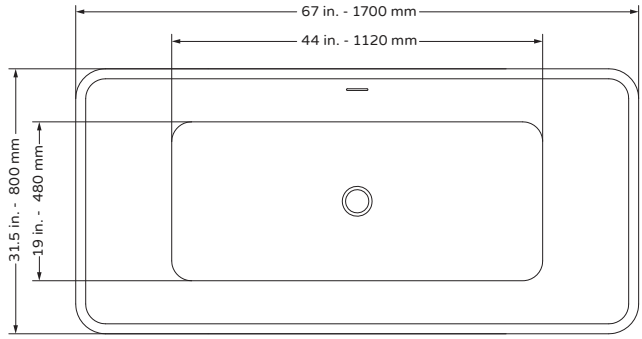

PT-1043-150

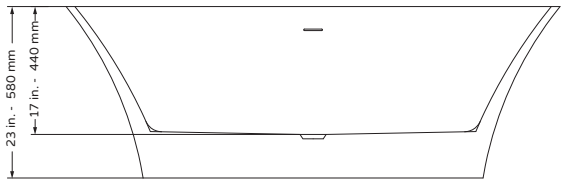

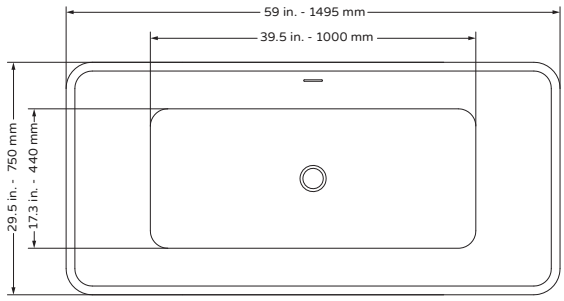

TECHNICAL INFORMATION

- Installation: Freestanding
- Color: Polished White Acrylic
- Max Weight: 1102.31LBS (500kg)
- Drain Location: Center
- Drain Finishes: Chrome or Brushed Nickel

PT-1003

- Product Weight: 108 lbs
- Water Capacity: 75.3 gal
- Box Dims: 25”x33.5”x69”

PT-1003-150

- Product Weight: 69.5 lbs
- Water Capacity: 56.5 gal
- Box Dims: 61”x31.5”x25”

PRODUCT FEATURES

- 100% polished white acrylic material
- Bathtub with waste/overflow and brass pop-up drainage
- Waste & drain finishes available in chrome or brushed nickel
- Integral Slotted overflow allows for deep soaking
- Center toe-tap drain

NOTES

- Measure your actual product for rough-in details
- Install this product according to the installation instructions
- Allow for 3” (76mm) diameter of clearance around the drain pipe on finished floor material to prevent drain body interference during installation

CODE/STANDARDS

- cUPC Approved

WARRANTY
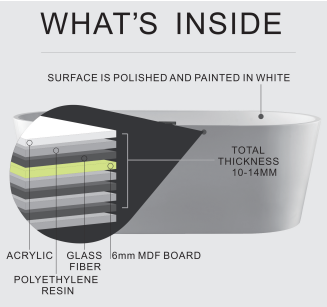
- 10 Years