Nirvana Shower System

Model # 1070-CH

Specification Sheet

297 Anna St. | Watsonville, CA 95076
831.724.7300
www.PulseShowerSpas.com

TECHNICAL INFORMATION
- Finishes: CH
- Fixtures: CH
- GPM: 2.5
- Connection: 1/2” NPSM

PRODUCT FEATURES
- Surface mounted & pre-plumbed
- 4.5 inch rain showerhead and handshower
- Drill-less handshower holder
- Adjust mirror along slide bar
- Multifunction showerhead and handshower
- Conveniently located lower diverter
- Adjustable soap dish/shelf
- Easily refilable soap dish dispenser with visible front window
- Conveniently located loofa

NOTES
- Measure your actual product for rough-in details
- Install this product according to the installation instructions
- Mixing valve NOT included
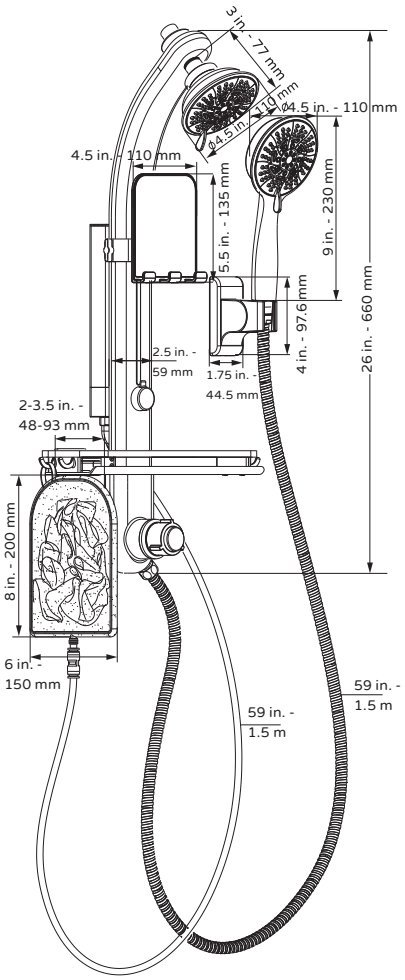
WARRANTY
- Lifetime Limited Warranty